E-WALL-DTR-868

OUTDOOR DUAL TECHNOLOGY DETECTOR VIA BIDIRECTIONAL RADIO

INSTALLATION AND USE MANUAL

18.05-M:4.0.2-H:SE-08v4-F:1.5

E-WALL-DTR-868 is a curtain detector for protection of doors and windows.
This device has double technology detection: it integrates two infrared passive modules and a pulsed microwave module, designed to obtain a very narrow detection beam.
The alarm is generated only when both technologies detect at the same time, avoiding false alarms.
The device is provided with automatic temperature compensation of its partameters.
Its dimensions – particularly reduced in height and width – allow an easy installation in the narrow spaces available on doors and windows.
The sensor is protected from removal risk, thanks to an integrated anti-removal system.
Communication occurs bi-directionally with the control panel.

READ CAREFULLY THIS MANUAL BEFORE INSTALL YOUR NEW ALARM SYSTEM. KEEP THIS MANUAL FOR FUTURE REFERENCE.

ONLY QUALIFIED TECHNICIAN MUST INSTALL THIS DEVICE. INSTALLER MUST FOLLOW CURRENT REGULATIONS.

THE MANUFACTURER SHALL NOT BE LIABLE FOR ANY IMPROPER USE OF THE PRODUCT, INCORRECT INSTALLATION OR FAILURE TO COMPLY WITH INSTRUCTIONS OF THIS MANUAL AND THE LAW REGARDING ELECTRICAL SYSTEMS.

DETECTION AREA

A

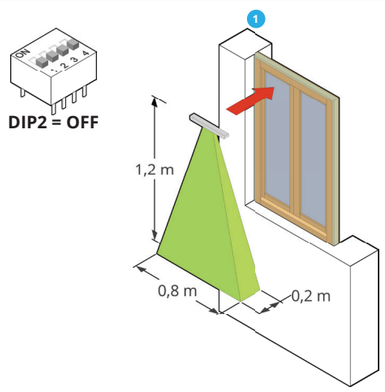

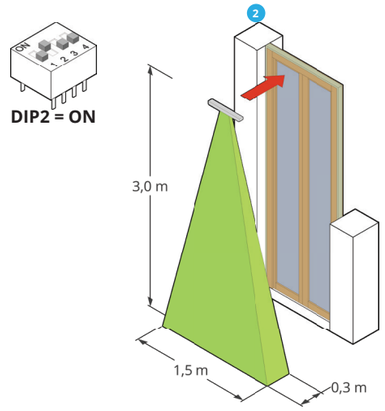

PLACEMENT

The detector must be installed only in horizontal position over the opening to protect, oriented downward (fig. B-1 and B-2).

B

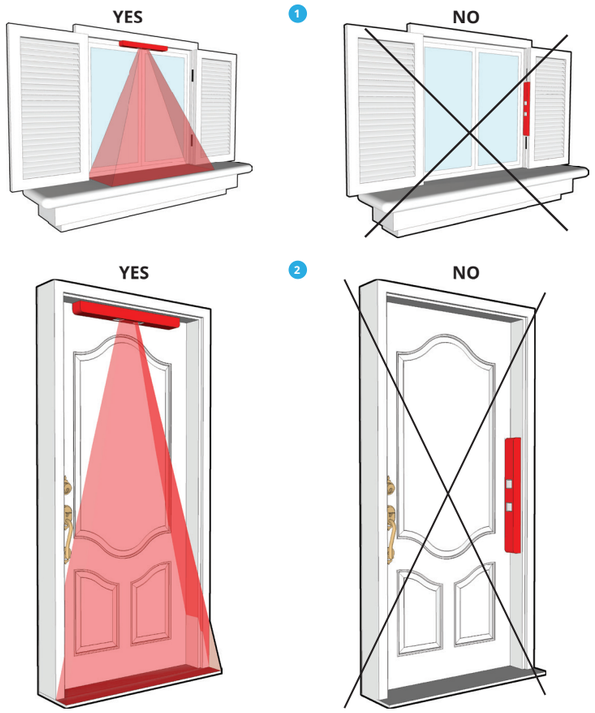

The detector must be installed with the side that presents the LEDs towards OUTSIDE (garden, backyard, balcony...) and the opposite side towards INSIDE (door or window) to protect:

C

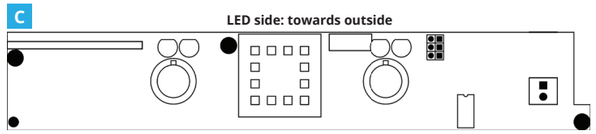

PRECAUTIONS

- Detector must be installed protected from the elements. Install protected from direct rain.
- This sensor has been designed to guarantee a very high immunity to light interference; however, a very bright light can produce a range decrease.
  It is recommended to pay attention during the installation and avoid, as much as possible, that direct or reflected solar light or very intense lights are oriented towards the two sensitive elements.
  NEVER POINT the sensor directly towards reflective surfaces, in order to avoid unwanted detections. Typical examples of reflective surfaces are: windows, glass walls, water puddles, wet roads, smooth concrete surfaces, paved roads.
  The reflection level of these surfaces is not at 100%, anyway if the source of heat is very strong, the reflection may be enough to alarm the sensor.
- Infrared detector is sensitive to the "amount of heat" produced by a moving body.
  The maximum range of the sensor (measured in meters) is referred to a human body.
  However the same "amount of heat" may be produced by a smaller body at lower distances, or by a larger one at greater distances. It should be considered therefore that the range of any passive infrared sensor is a RELATIVE measure (referring to a human body) and NOT ABSOLUTE.

D

- The sensor is highly immune to false alarms caused by presence of regular mosquito nets or rollers within the detection area, provided that nets are always taut and rollers are fully raised or lowered. If these indications are not met, increase both the risk of false alarms and the battery consumption (mod. DT-R and mod. DT-K).
- Do not point the sensor towards unstable objects, such as: bushes, flags, tree branches, clothes hung, etc. This avoid unwanted detections.
- During adjustment, perform as detection tests as necessary to obtain a correct sensor behavior.
- The sensor may detect pets (no pet-immune function).

TECHNICAL

Power supply	n. 1 lithium battery pack, 6 V	
Absorption *	Stand-by: about 28 µA Alarm: about 6,5 mA	
Autonomy (estimated) **	About 2 years	
Stabilization Time (at power-up)	About 120 seconds	
Quiet Time between detections ***	About 30 seconds	
TEST mode lasting	5 minutes (at the end, the sensor backs to NORMAL mode even if J.MODE = CLOSED)	
Detection technologies	Infrared (double head) + Pulsed microwave	
Microwave frequency / working mode	24 GHz / Pulsed	
Detection Area (H x W x D) *	Door: 3 x 2,5 x 0,3 m Window: 1,2 x 0,8 x 0,2 m	
Radio working frequency	869,650 MHz	
Radio range	100 m (open field)	
Radio signalling	Alarm Low Battery (LWB) Supervision	Tamper Learning/pairing
Wired outputs	-	
LED signalling	2 red LED (IR heads detection) 1 green LED (microwave detection) 1 blue LED for alarm	
Temperature **** / Humidity	-40 ÷ +70 °C / 95 % (relativa)	
Case	ABS antiUV	
Dimension (A x L x P)	40 x 330 x 30 mm	
Internal space for transmitter (H x W x D)	-	

* All the data are approximate, for sensor in NORMAL mode at operating temperature of 21 °C
** Mean value for 50 detections-alarms/day + supervision
*** Sensor working in NORMAL mode
**** Automatic parameters adjustment with temperature, linear compensation

BATTERY DURATION (ESTIMATED) IS PROPORTIONAL TO:
- **HEAT CYCLES OF THE BATTERY WHICH AFFECT CHARGE CAPACITY AND DURATION**
- **WORKING TEMPERATURE OF THE BATTERY (E.G.: AT TEMPERATURE LOWER THAN 0°C THE BATTERY DURATION MAY DECREASE OF 50 %)**
- **NUMBER OF DETECTIONS TO WHICH THE SENSOR IS SUBJECT: IF THE SENSOR IS INSTALLED IN HIGH FREQUENCY OF PASSAGE, THE BATTERY DURATION WILL DECREASE DRAMATICALLY**

THE MAX RANGE DEPENDS SIGNIFICANTLY ON ENVIRONMENT TEMPERATURE.

E

To open the sensor, remove the screw and lift the cover (fig. E).
If the anti-opening tamper is active, the sensor transmits alarm.

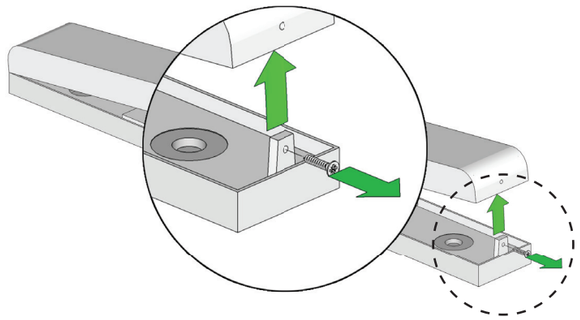

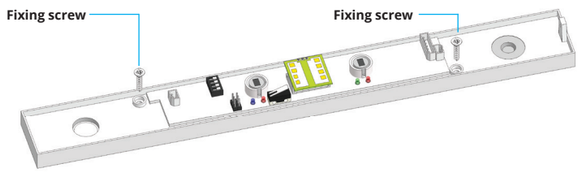

G

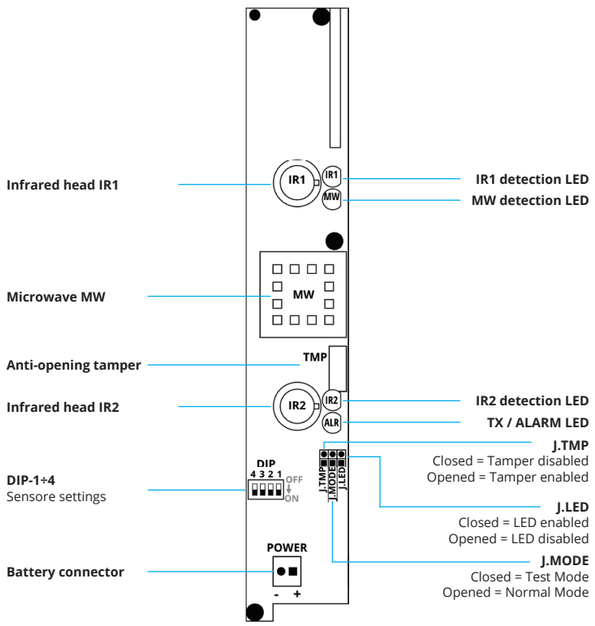

DIP-SWITCH

		OFF	ON
DIP1	Anti-removal	Active	Excluded
DIP2	Detection type	Window (low sensitivity)	Door (high sensitivity)
DIP3	Not used		
DIP4	Radio pairing	Disabled	Enabled

It is recommended to disable the LEDs (J.LED = OPENED) after the test to increase the battery life.

POWER-ON

BEFORE POWER THE SENSOR
If the sensor is already powered (or at battery change), before proceed it is necessary to disconnect the battery, open the jumper **J.TMP** and hold the tamper switch for about 10 seconds: in this way the circuit will be completely discharged and will be possible to start-up the sensor correctly.

EWALL-DTR
The sensor must be powered EXCLUSIVELY if set as follows:

DIP1 = OFF	Anti-removal tamper active
DIP2 = OFF	"Low sensitivity" detection
DIP3 = OFF	Radio Test off
DIP4 = OFF	Supervision off

J.TMP = CLOSED	Anti-opening tamper disabled
J.LED = CLOSED	LED enabled
J.MODE = CLOSED	Test Mode active

After "stabilization" is possible to change the settings of the sensor without switch it off.

Each time the sensor is correctly powered, the BLUE LED switch on, then all the LEDs blink simultaneously: the sensor starts the "**stabilization**".
The stabilization takes about **2 minutes** (the infrared and microwave LEDs light on in case of detection).
At the end of the stabilization time, the sensor is ready for use.

PAIRING

AN LEARNING

1. Power on the sensor and wait the end of stabilization.
2. Set DIP-SWITCH and JUMPERs as follows:

DIP1 = ON	Anti-removal tamper excluded
DIP2 = --	*ON or OFF*
DIP3 = --	*ON or OFF*
DIP4 = ON	*Radio pairing Enabled*

J.TMP = OPENED	Anti-opening tamper active
J.LED = CLOSED	LEDs active
J.MODE = CLOSED	Test Mode

3. The LED on the radio module starts to flash to indicate the pairing mode.
4. On the control unit: enter into pairing radio devices
5. In the absence of detection, press the **TMP** anti-opening tamper switch for a few seconds. The sensor transmits the pairing code.
6. Check that the control unit has learned the sensor, otherwise repeat step 5 again
7. **IMPORTANT**. After the control unit has learned the sensor, return the sensor to normal mode (**DIP4** = OFF)
8. The LED on the radio module stops flashing to indicate the normal operating mode.

TEST AND NORMAL MODES

With **J.MODE** jumper is possible to set the sensor in TEST or NORMAL mode:

- TEST mode: **J.MODE** = **CLOSED**

  The sensor transmits / signals alarm at each detection.
  This mode allows the installer a correct tuning of the detector.
  To exit from TEST mode and back to NORMAL, open the **J.MODE** jumper: some seconds after last detection, the sensor signals the exit by sequentially turning on the LEDs (round trip).
  The sensor exit automatically from TEST after about 10 minutes – even without opening the **J.MODE** jumper. The automatic exit is also signalled by the sequential turning on of the LEDs.
  If necessary to increase the TEST mode time, simply open and close the **J.MODE** jumper and wait for the confirmation (the LEDs blink).

  The TEST mode is set as default.

- NORMAL mode: **J.MODE** = **OPENED**

  It's the mode the detector MUST be set when in normal working.
  In this mode – after last detection and alarm transmission – the detector wait for a "quiet time" before to consider a new intrusion (alarm).
  If during this time there is no detection the sensor will back ready to a new detection, otherwise the quiet time is extended.
  The quiet time is about 30 seconds (not changeable).

  The NORMAL mode allow a lower consumption and a longer battery life.

ANTI-REMOVAL TAMPER (INCLINOMETER)

The sensor is provided with an anti-removal function (that can be activated with **DIP1**) which establishes whether the sensor is moved from the installing position.

I

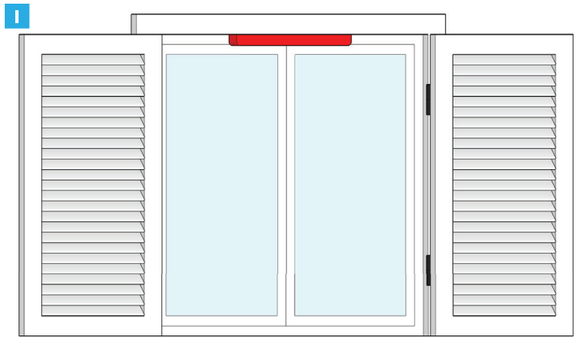

This function is activated just when the sensor is in the HORIZONTAL position and afterwards it is inclined. In order to activate the removal detection, it is necessary to put the sensor horizontally: from now on the anti-removal is activated; if the sensor moves it indicates tamper alarm.

L

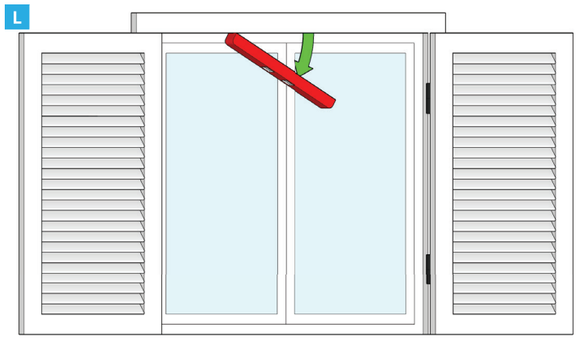

BATTERY

The sensor communicates its current battery level to the control unit at each transmission. This level is always visible from the App (Windows, iOS, Android) when connected to the control panel.
The control panel can send low battery notifications via SMS, e-mail, push (if enabled).
Note: Low battery warnings continue until the battery is replaced.

BATTERY REPLACEMENT

When the battery must be replaced:

- Disconnect the old battery
- Open the jumper **J.TMP** , then press and hold the tamper switch for at least 3 seconds (circuit discharge)
- Connect the new battery (see the par. "Power on")

Caution, the device works by lithium battery.
Handle with care. Risk of explosion and fire.
Do not dispose batteries in fire, do not weld or damage the battery.
Replace the battery exclusively with one of the same type.
Follow the polarity indicated in the instructions.
Have the battery replaced by a qualified technician.
Dispose of empty batteries following the current regulations, even in case of equipment disposal.
In case of leakage, protect your hands with special gloves.

DUEVI s.r.l. - Via Bard 12/a, 10142 TORINO - ITALY
Made in Italy
This manual may be subject to change without notice

EU Declaration of Conformity

Hereby, DUEVI declares that:

- the equipments type outdoor dual technology radio detector mod. E-WALL-DT-R is in compliance with Directive RED 2014/53/UE.
- the equipments type outdoor dual technology detector mod. E-WALL-DT-K and mod. E-WALL-DT-F are in compliance with Directive EMC 2014/30/EU.

The full text of the EU Declaration of Conformity is available at the internet address:
www.duevi.eu